CARRUCA COMMUNAL TABLE

Assembly Instructions

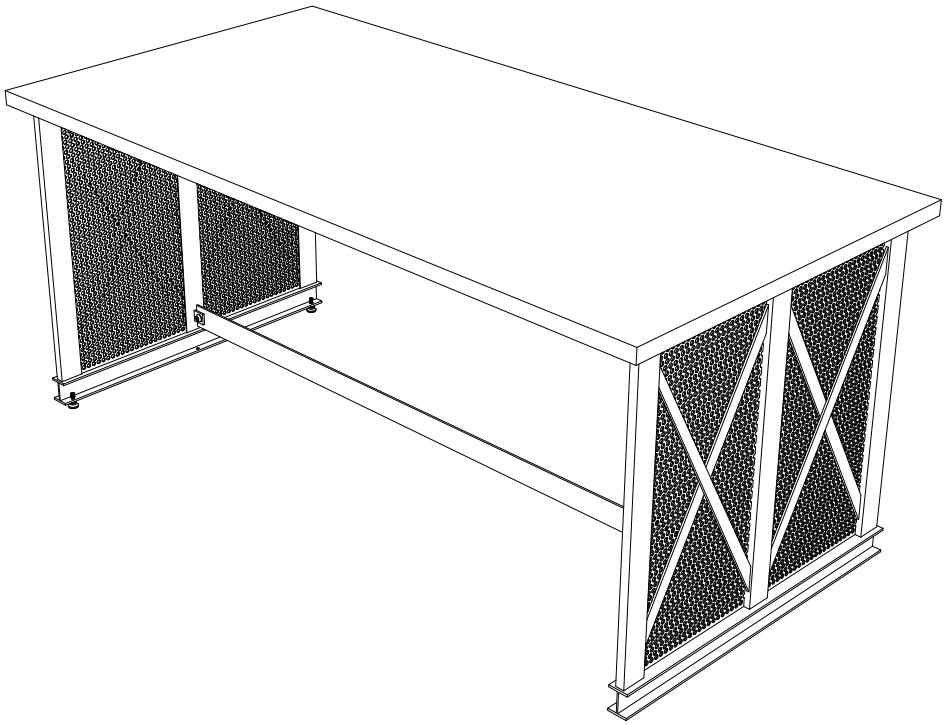

Thank you for your purchase!

Iron Age Office furniture is uniquely and individually fabricated. For this reason, your furniture is pre-assembled and labeled before shipping. Labels are marked on the underside of the furniture. Most furniture is then deconstructed prior to shipping. Pieces that uniquely correspond can typically be found on the same pallet.

Assembly is best completed by keeping the pieces that correspond together. Clear your work area of anything that could scratch furniture surfaces. If possible, cover your work area with a clean, soft blanket. Carefully flip any wooden tops over and inspect the bottom sides for markings. Match legs, flat brackets, etc. to the appropriate labels.

If you need further assistance of any kind, please contact:

Iron Age Office Operations Manager
Henry Dover
678-725-1473 (c)
hd@ironageoffice.com

HARDWARE

Screws are shown actual size. You may receive extra hardware with your unit.

Tools Required

1 14-10 LAG BOLT
QTY: 24

#3 Square Drive

2 SCREEN BOLT
QTY: 2

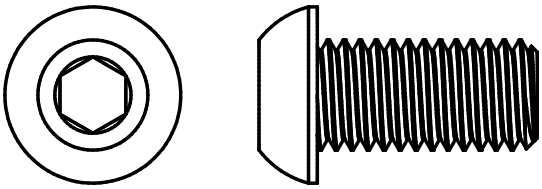

3/8 Hex Drive

3 SCREEN NUT
QTY: 2

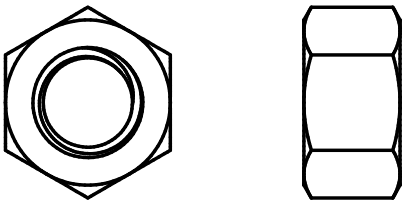

15/16 Crescent Wrench

4 LEVELING FOOT
QTY: 4

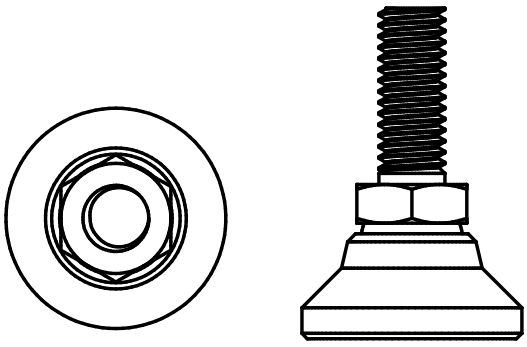

9/16 Crescent Wrench

PARTS

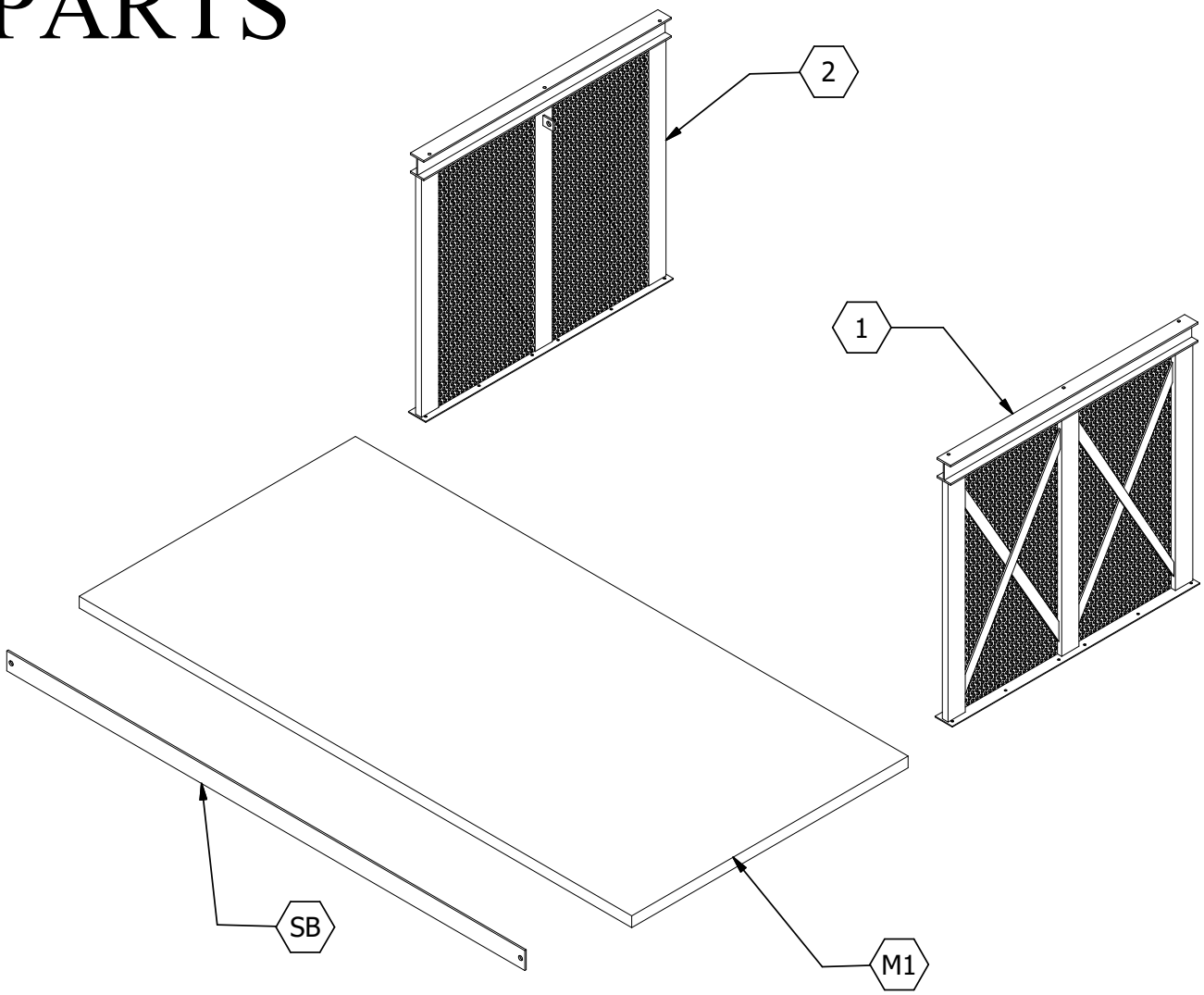

1	LEFT TABBED LEG
2	RIGHT TABBED LEG
M1	MAIN TOP
SB	SUPPORT BAR

ASSEMBLY

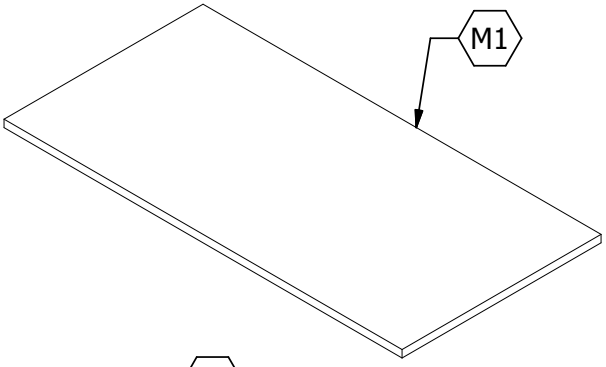

STEP 1
Place M1 top face down on a clean surface.

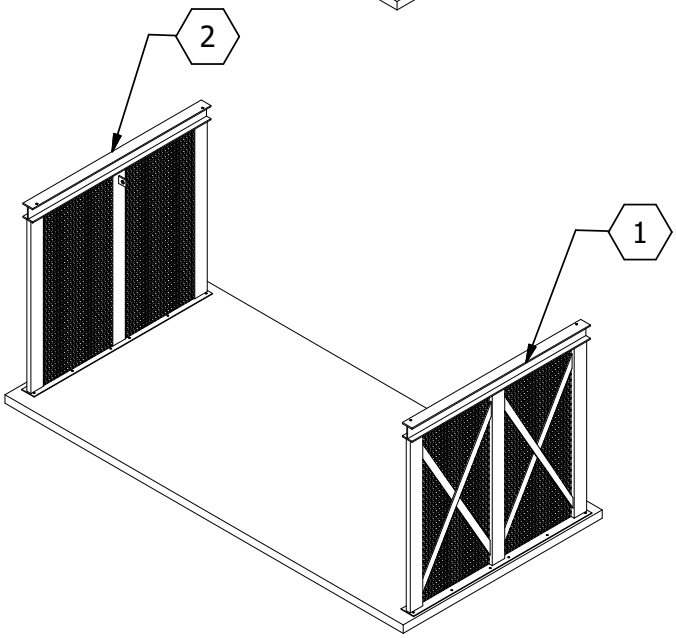

STEP 2
Align legs using markings on
the underside of the M1 top.
Tabbed legs should be placed so that
tabs are facing each other.
Screw in all legs with
(12) 14-10 lag bolts in each leg.

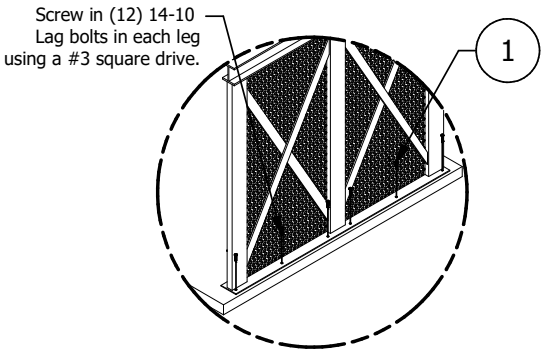

STEP 3
Align support bar to in between tabbed legs.
Secure support bar with (2) screen bolts and (2) screen nuts.

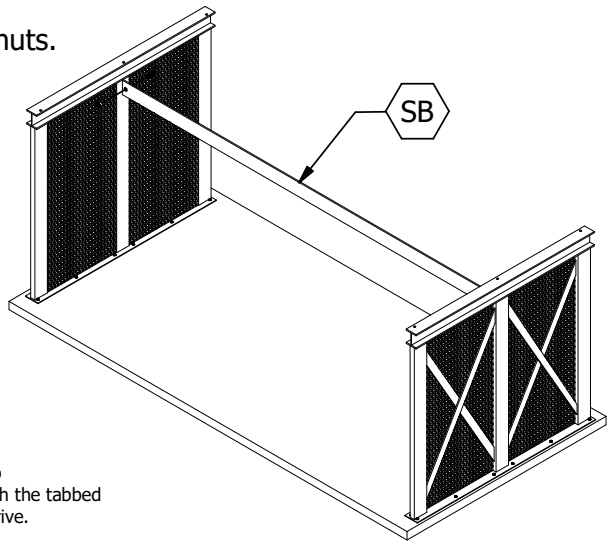

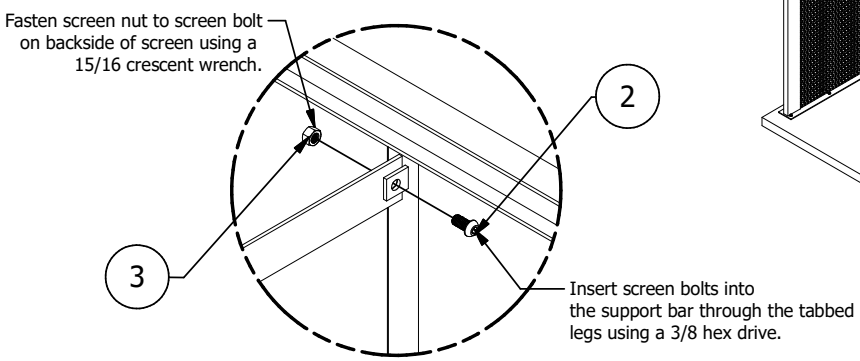

ASSEMBLY

STEP 4
Screw in (2) leveling feet in each leg.

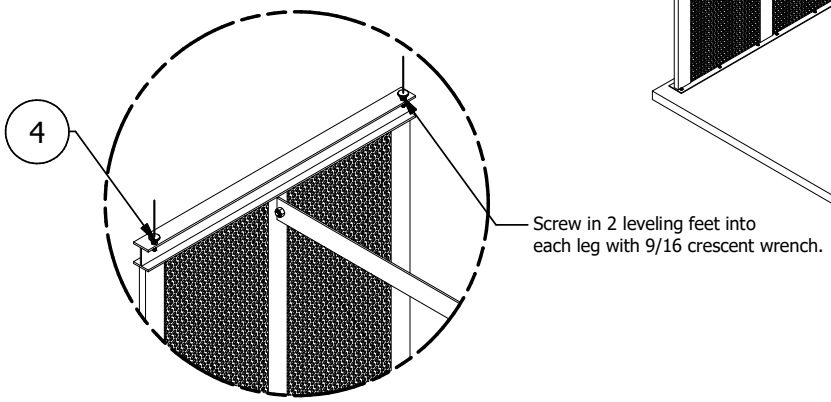

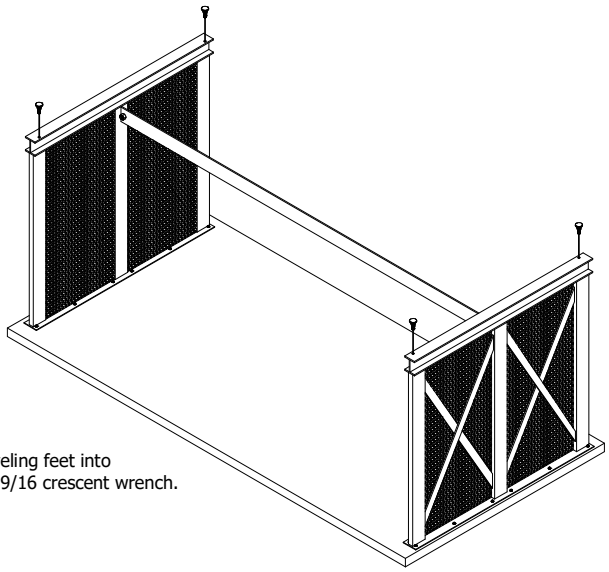

STEP 5
Flip M1 into an upright position.
Enjoy your table!

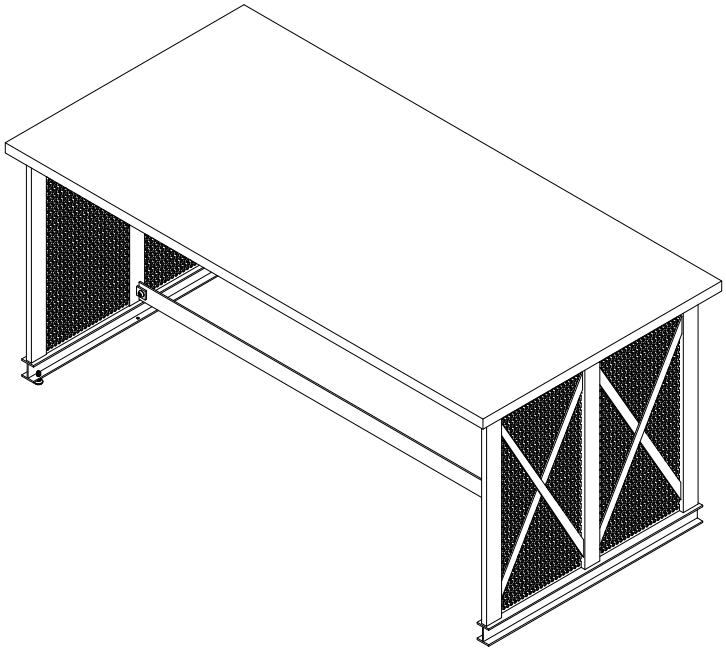

CARE INSTRUCTIONS

To care for either wooden or metal surfaces of Iron Age Office products,
gently wipe with a soft cloth dampened with water and a mild dishwashing liquid.
Once satisfied, dry with a soft cloth.